Data Sheet

Article number: 29560205075220
Description: Shaft mounted gear
A202S-50,7-P63B5

Measures

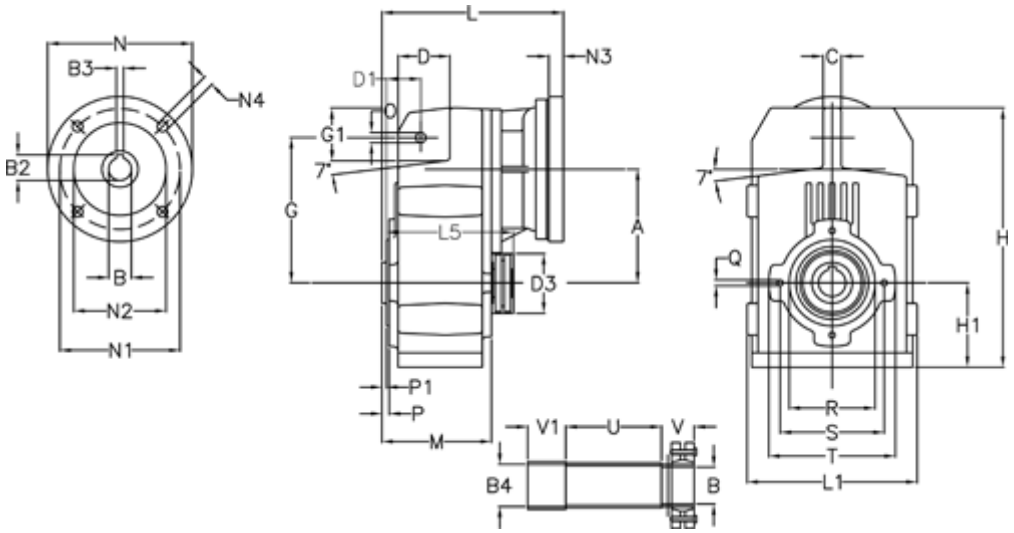

A = 125.00	D1 = 40.0	l5 = 182.0	P1 = 3.0	V1 = 40
B = 30	d3 = 83	M = 120.0	Q = M8x15	
B1 = 11	G = 160	N = 140	R = 95	
B2 = 12.8	G1 = 58.0	N1 = 115	S = 115	
B3 = 4	H = 286.0	N2 = 95	T = 140	
B4 = 32	H1 = 92.5	N4 = M8x19	Tightening torque N m = 14.5	
C = 20	L = 197.5	O = 11	U = 84.0	
D = 57.0	L1 = 188	P = 5.0	V = 38	

Product drawings and brochures of any kind may contain errors for which Brd. Klee A/S cannot be liable.